EarthScout® Set Up & Installation Guide

L200, L400 And L600 Outdoor Models

Welcome to a New World of Data Driven Decisions!

Congratulations on your purchase of an EarthScout. Only EarthScout enables growers like you to quickly and easily gather real time data about your soil, crop and growing environment to make more informed decisions. If at anytime you need assistance with the installation or help understanding your data, please call us at 877-443-7632.

What's Included:

- EarthScout (w/built in air temp & humidity sensor)
- Soil Sensor #1 (measures moisture, EC & temp)
- Rechargable Batteries (2)
- Battery Charger (1 per order)
- Survey Stakes (2)
- Soil Sensor #2 (L400 & L600 models only)
- Solar Radiation Sensor (L600 model only)

What You'll Need:

- 15-20 Minutes
- Earth Auger or Spade
- Tape Measure

Setup & Install EarthScout In 10 Easy Steps

Step 1: Remove EarthScout from carry case and set black metal legs in configuration shown right. Tighten bolts on legs to lock in place. Stand up device on level ground (Diag. 1.1).

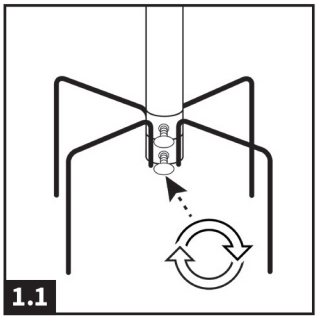

While pulling spring loaded pins out, swing solar panel upward 90 degrees above gray box. Release pins to lock solar panel in place (Diag. 2.2).

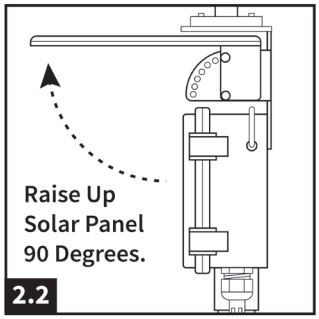

Step 2: To power device, Begin by pulling out spring loaded pins on left and right side of solar panel (Diag. 2.1).

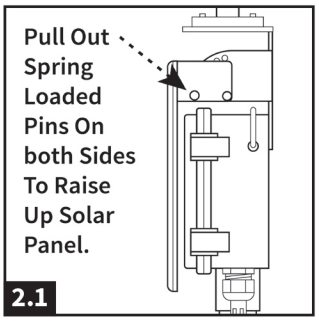

Step 3: Unclasp clips on side of gray box and open door. Remove plastic tab from battery terminal and ensure metal pins on the battery are touching the metal tabs in the housing (Diag. 3.1).

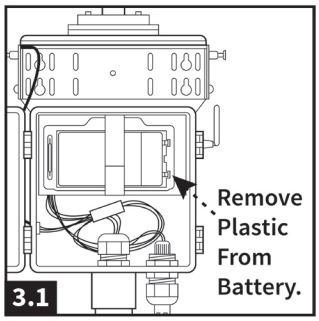

How to Install Your EarthScout (Continued)

Step 3 Continued: Tighten velcro battery strap. Don't remove moisture absorbing packet (Diag. 3.2). Close door by fastening clasps on side of gray box.

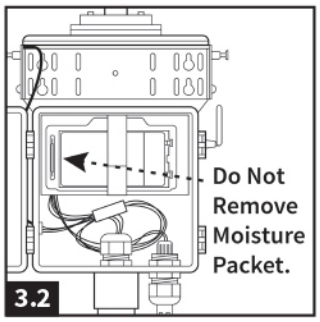

Step 4: Pull out spring loaded pins on sides of solar panel and swing it down in front of door at 45 degree angle. Insert pins into 4th hole from top (Diag. 4.1)

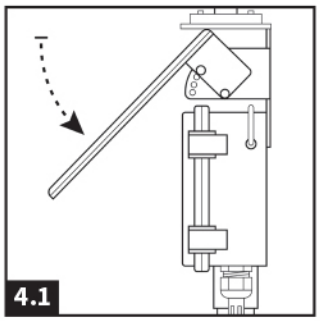

Step 5: Move EarthScout to edge of field. Choose a location for Soil Sensor placement at edge of root zone 12 to 20-inches from plant. Careful not to cut or disturb plant's root zone, use earth auger (best) or shovel to dig 14 x 20-inch hole (Diag. 5.1).

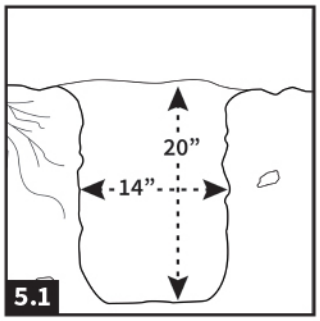

Step 6: Remove sensor cap. Holding sensor level, reach into hole 4 to 8-inches (See Grow Table on far right for recommended sensor depth based on crop type) and insert sensor horizontally into root zone, careful not to disturb soil (Diag. 3.1).

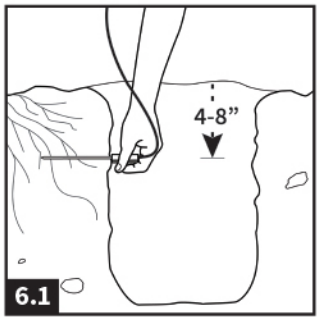

Step 7: If you have a second soil sensor (L400 & L600 models), insert horizontally below first sensor at 10 to 16-inch depth to compare sensor data at two levels (Diag. 7.1). See Grow Table on far right for recommended sensor depth based on crop type.

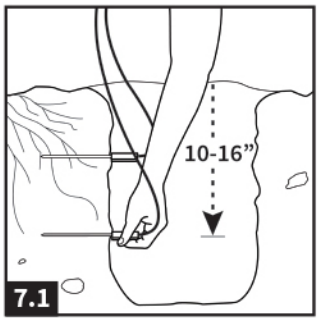

Step 8: Make cables exit hole close to plant above sensors. Fill hole. Compact dirt to match surrounding soil to avoid water pools. Put 1 survey stake above sensors and 2nd on opposite edge (Diag. 8.1).

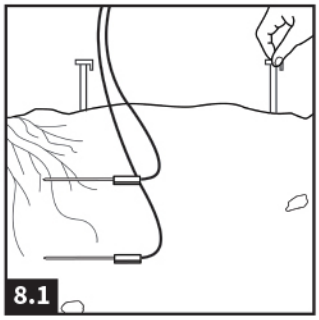

Step 9: Face solar panel south for maximum sunlight and adjust solar panel to position based on your location (Diag. 9.1). See Solar Panel Angle Guide on back page.

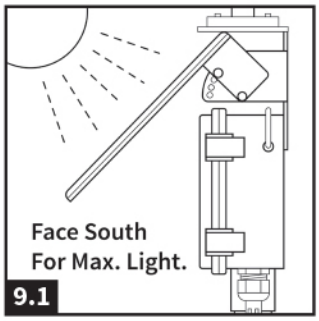

Step 10: Use foot to press EarthScout legs deep in ground near hole. If crop grows taller than EarthScout, add flag to top (Diag. 10.1).

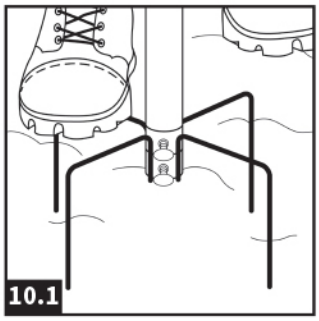

EarthScout® Outdoor Grow Table

Crop Type	Root Depth Shallow/Deep		Typical Root Structure	Sensor Placement (prongs horiz. unless specified)
Hemp (high pop. and/or transplants)	4”	8”	Mostly fibrous, expect mass of roots within 4-10”.	Between plants, in the row.
Hemp (low pop and/or seed start	6”	12”+	Taproot with deep cone.	1 - 1.5’ from center of plant.
Hops	6”	12”+	Rhizomes with fibrous “water roots” (horiz 2-3ft., vertical varies and goes deep depending on age and soil).	Between plants, prongs facing into the row more than 3ft. from the base of the specimen plant.
Grapevine	8”	Call Grow Coach	Varies, depending on pruning, stock age and soil conditions.	Near permanent irrigation structures, or between emitters, prongs facing row or trunk. Place close to emitters to reduce overwatering.
Most Fruit & Nut Trees	4-6”	10-16”	Taproots common but also fibrous or framework-style secondary roots, structure depends on branch pruning techniques and spacing.	Inside the drip line, prongs facing any direction. Place 1-3” from main trunk and prongs facing into row if trellised.
Turfgrass, Med Height	2”	6”	Fibrous, mat-like structure.	Prongs facing in direction of water flow.
Turfgrass, Greens Height	1-2”	4-6”	Fibrous, mat-like structure.	Prongs facing into the green, and/or in direction of water flow.
Soybean	6”	12”	Taproot with linear lateral roots forming squared or elongated cone. Up to 2’ depth & strongly effected by soil structure.	Within a foot of the specimen plant, prongs facing the row or the plant. Lighter soils may mean up to 2’ effective root depth.
Corn	8”	12-16”	Fibrous with seminal and nodal roots.	Within 1 foot of the row, prongs going through the row and within 1 ft. of the specimen plant.
Wheat	8”	16”	Fibrous mat-like structure	Prongs going through the planting row.
Truck Crop (processing & fresh)	6”	12”	Strongly species dependent and great variability within the group.	Within 18” of the specimen plant, prongs within the row or under mulch facing the plant or along side.
Cotton	8”	16”	Taproot with deep cone.	Within the row or through the row, between plants.

Solar Panel Angle Guide

Reference the chart below for determining the best angle for your solar panel based on your location. Reference the diagram for hole selection. Contact EarthScout for panel angle if you live outside Canada, USA and Mexico.

Location	Degrees	Hole
Central & South Mexico (Latitude 0-22.5)	0	1
Southern United States (Latitude 22.5 - 37.5)	15	2
Northern United States (Latitude 37.5 - 55)	30	3
Canada	45	4

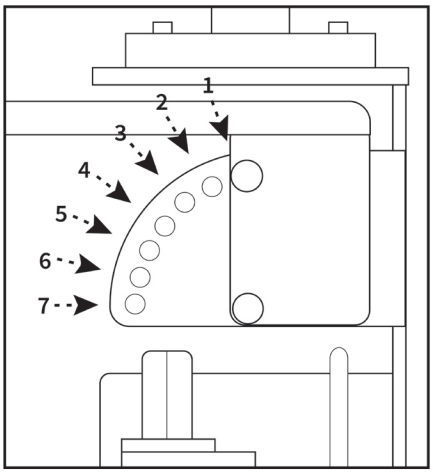

Uninstalling Your EarthScout

To properly uninstall EarthScout, you will need a hand trowel and towels to clean it before re-use or storage.

Step 1: Locate EarthScout on property using GPS coordinates or flag marker. Then, locate 2 survey stakes around edge of hole, marking where sensor(s) are buried (Diag. 1.1).

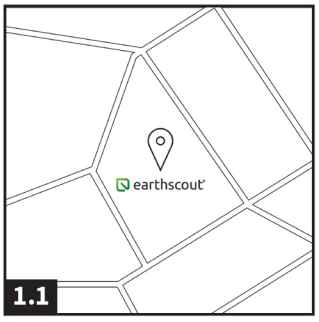

Step 2: Using hand trowel, excavate hole starting at the survey stake furthest away from the plant. Dig straight down 18-inches. Continue to excavate dirt, carefully working toward cords and sensors (Diag. 2.1).

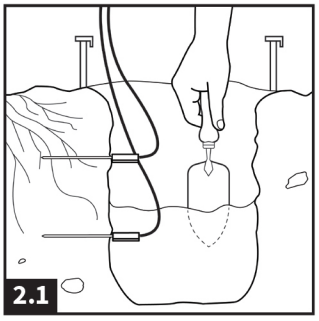

Step 3: Remove sensors by pulling horizontally from root zone (Diag. 3.1). **Don't pull on cables or bend metal prongs - may harm sensors.** Clean sensors with cloth, coil cords and place in holder.

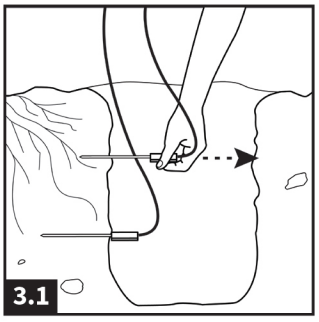

Step 4: Gently pull EarthScout out of ground, wipe down with clean cloth and put in storage case. Store in cool, dry place (Diag. 4.1).

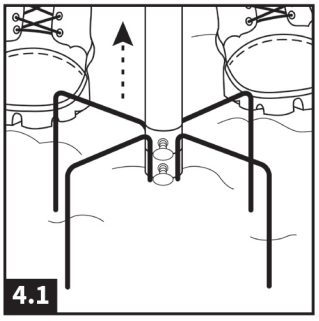

We understand the importance of having a strong support network for our customers. If at anytime you need assistance, please call 877-443-7632. We want you to be 100% satisfied with your new EarthScout. Welcome aboard!

earthscout®

EarthScout is a registered Trademark of Earth Scout GBC. ©2020 Earth Scout GBC. All Rights Reserved.

DRC 052899 Rev. B